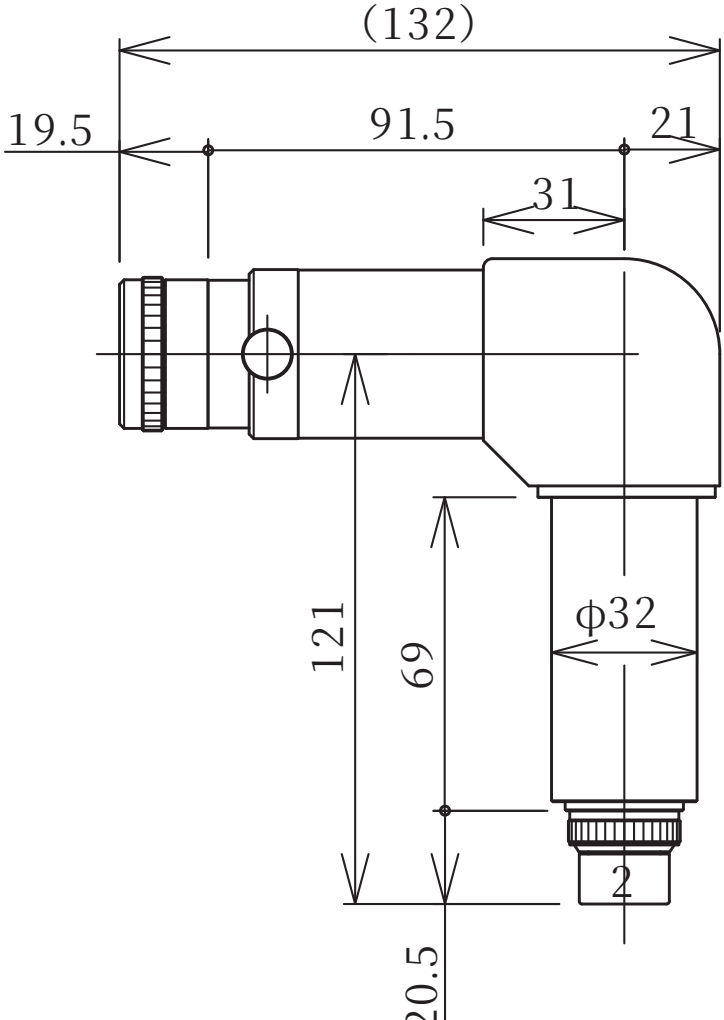
(132)
19.5
91.5
21
31
121
69
φ32
2
20.5