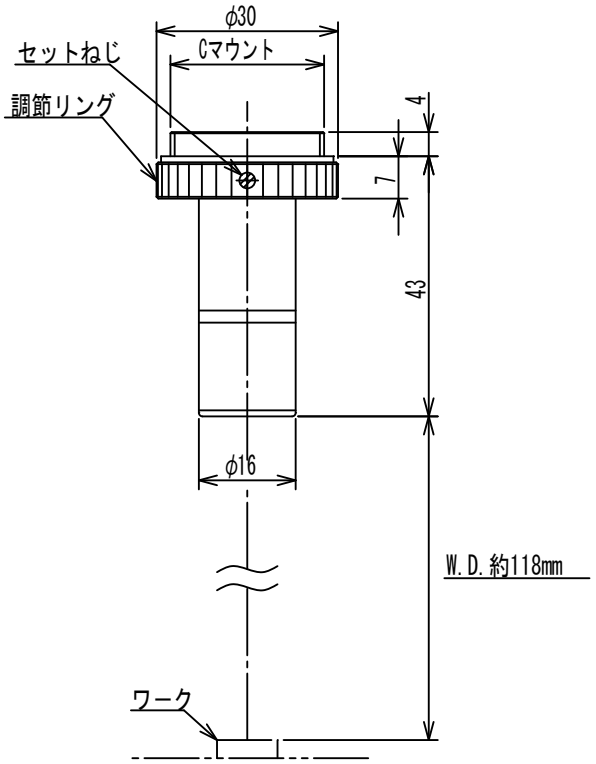

TMC-0.5×-118