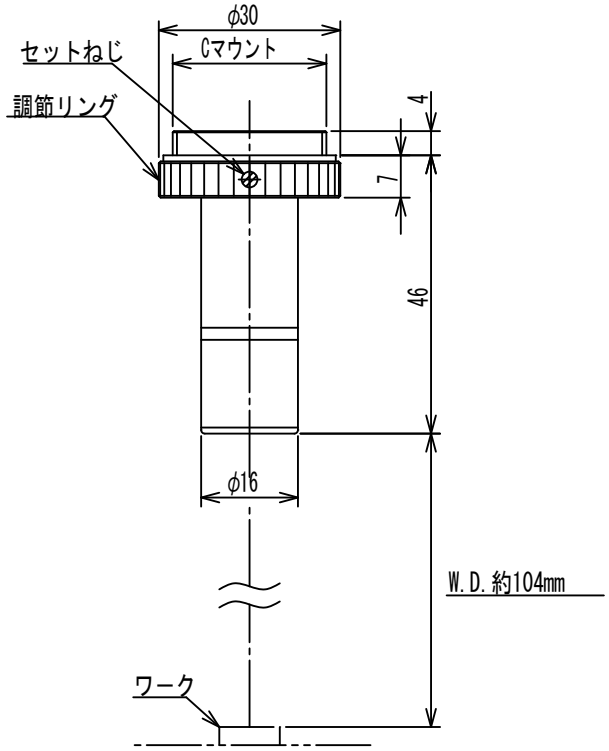

TMC-0.6×-104