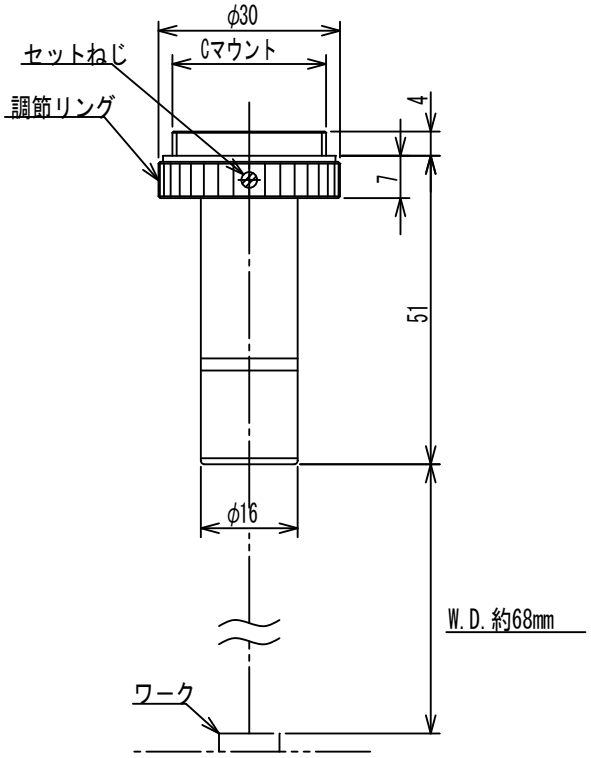

TMC-1.0×-68