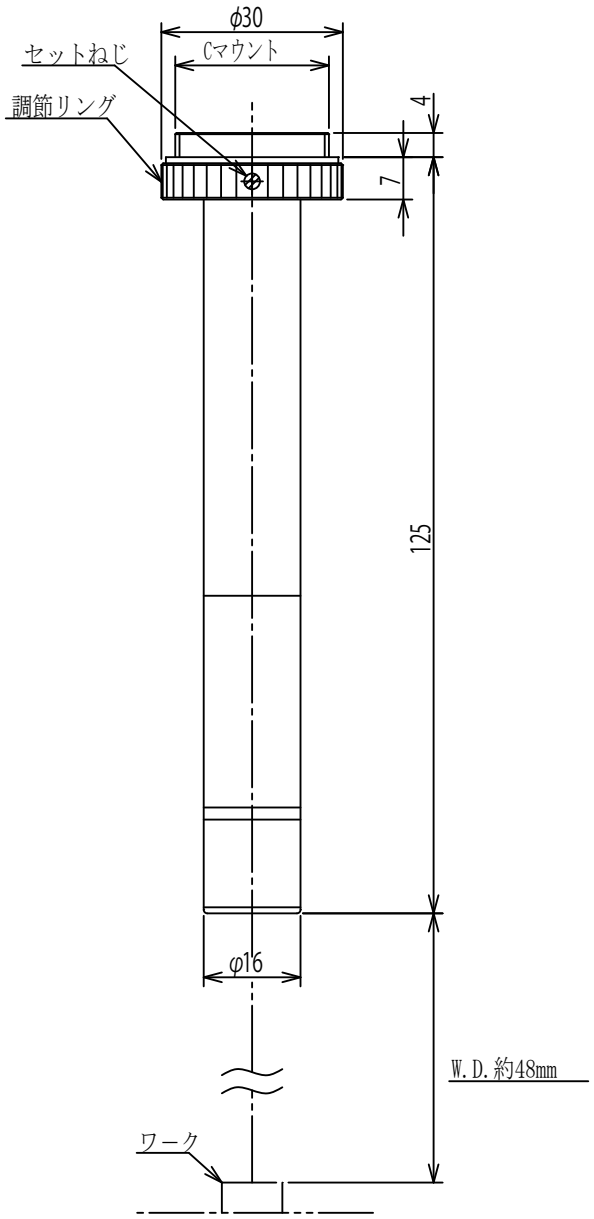

TMC-3.0×-48